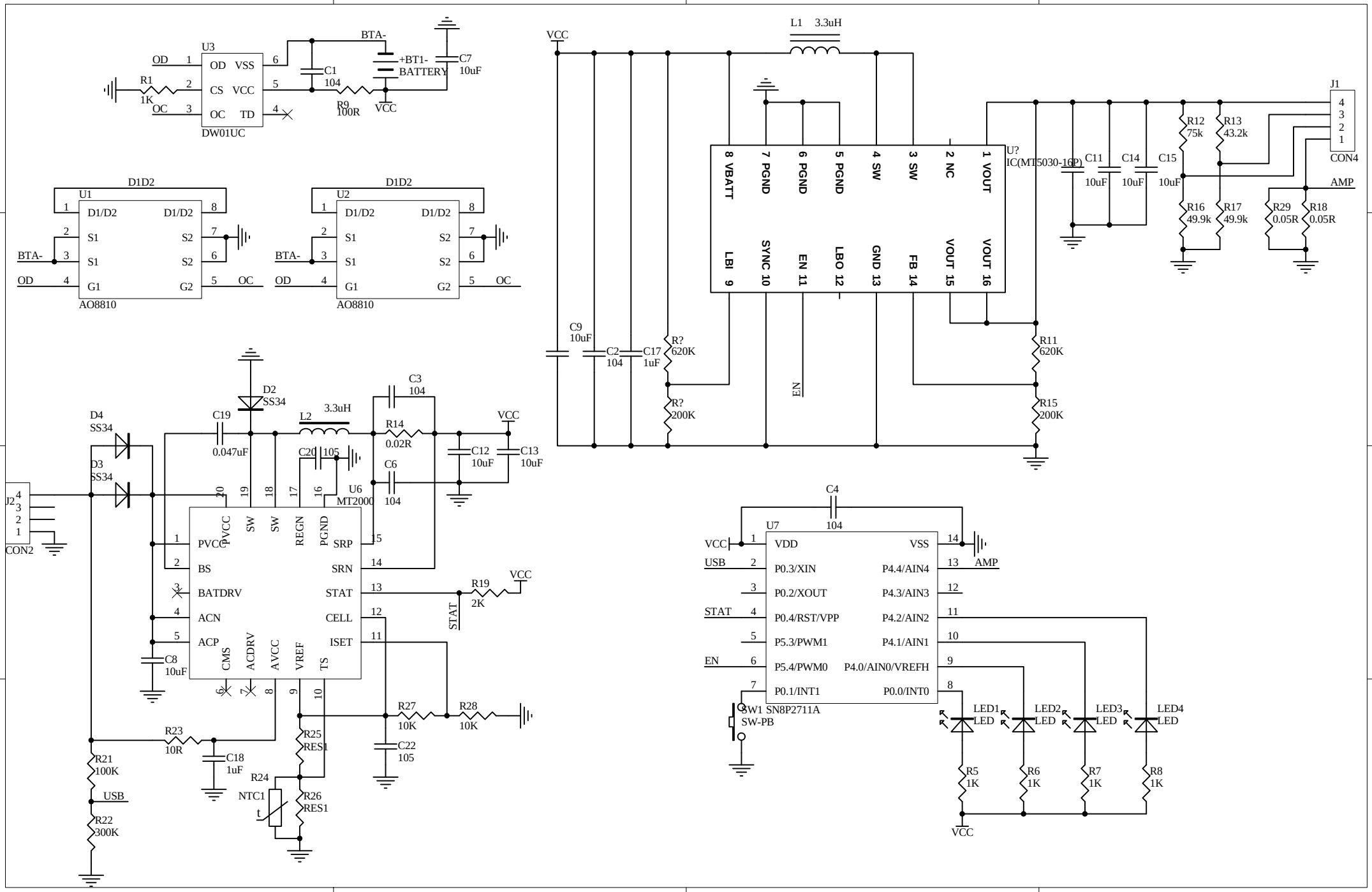
U3
DW01UC
OD
OC
CS
VCC
VSS
TD
R1
1K
C1
104
R9
100R
BTA-
+BT1-
BATTERY
C7
10uF
VCC
D1D2
U1
U2
AO8810
S1
S2
G1
G2
BTA-
OD
OC
L1 3.3uH
U?
IC(MT5030-16P)
VBATT
PGND
SW
NC
VOUT
LBI
SYNC
EN
LBO
GND
FB
C9
10uF
C2
104
C17
1uF
R?
620K
R?
200K
R11
620K
R15
200K
C11
10uF
C14
10uF
C15
10uF
R12
75k
R13
43.2k
R16
49.9k
R17
49.9k
R29
0.05R
R18
0.05R
J1
CON4
AMP
D2
SS34
D4
SS34
D3
SS34
C19
0.047uF
L2
3.3uH
C3
104
R14
0.02R
C20
105
C6
104
C12
10uF
C13
10uF
J2
CON2
U6
MT2000
PVCC
SW
REGN
PGND
BS
BATDRV
ACN
ACP
SRP
SRN
STAT
CELL
ISET
CMS
ACDRV
AVCC
VREF
TS
C8
10uF
R19
2K
STAT
R27
10K
R28
10K
C22
105
R23
10R
C18
1uF
R21
100K
R22
300K
USB
R24
NTC1
R25
RES1
R26
RES1
C4
104
U7
VDD
VSS
P0.3/XIN
P0.2/XOUT
P0.4/RST/VPP
P5.3/PWM1
P5.4/PWM0
P0.1/INT1
P4.4/AIN4
P4.3/AIN3
P4.2/AIN2
P4.1/AIN1
P4.0/AIN0/VREFH
P0.0/INT0
SW1 SN8P2711A
SW-PB
LED1
LED2
LED3
LED4
R5
1K
R6
1K
R7
1K
R8
1K